An Active FTC for quadcopter aerial vehicle subject to partial and total actuator faults.

Gerardo Ortiz-Torres

CENIDET - National Center for Research and Technological Development.

UTC - Université de Technologie de Compiègne, Heudiasyc UMR.

May 15 2018

Contents

Introduction

Unmanned Aerial Vehicles (UAVs) have become promising mobile platforms capable of navigating semi-autonomously or autonomously in uncertain environments.

Introduction

Multirotor vehicle

The multirotor vehicle, has proof to be suitable for these applications due to the fact that requires less space for take-off and landing, and is essentially simpler to build, comparing to a conventional helicopter.

It is an under-actuated system and is a dynamically unstable system.

Introduction

The multirotor is also sensitive to aerodynamic disturbances that can lead to different faults.

In order to increase the multirotor safety and reliability, FTC systems can be considered to identify malfunctions at any time, and to allow a stable flight even if faults occurs.

Introduction

The multirotor is also sensitive to aerodynamic disturbances that can lead to different faults.

In order to increase the multirotor safety and reliability, FTC systems can be considered to identify malfunctions at any time, and to allow a stable flight even if faults occurs.

Introduction

The multirotor is also sensitive to aerodynamic disturbances that can lead to different faults.

In order to increase the multirotor safety and reliability, FTC systems can be considered to identify malfunctions at any time, and to allow a stable flight even if faults occurs.

Contents

General FTC scheme

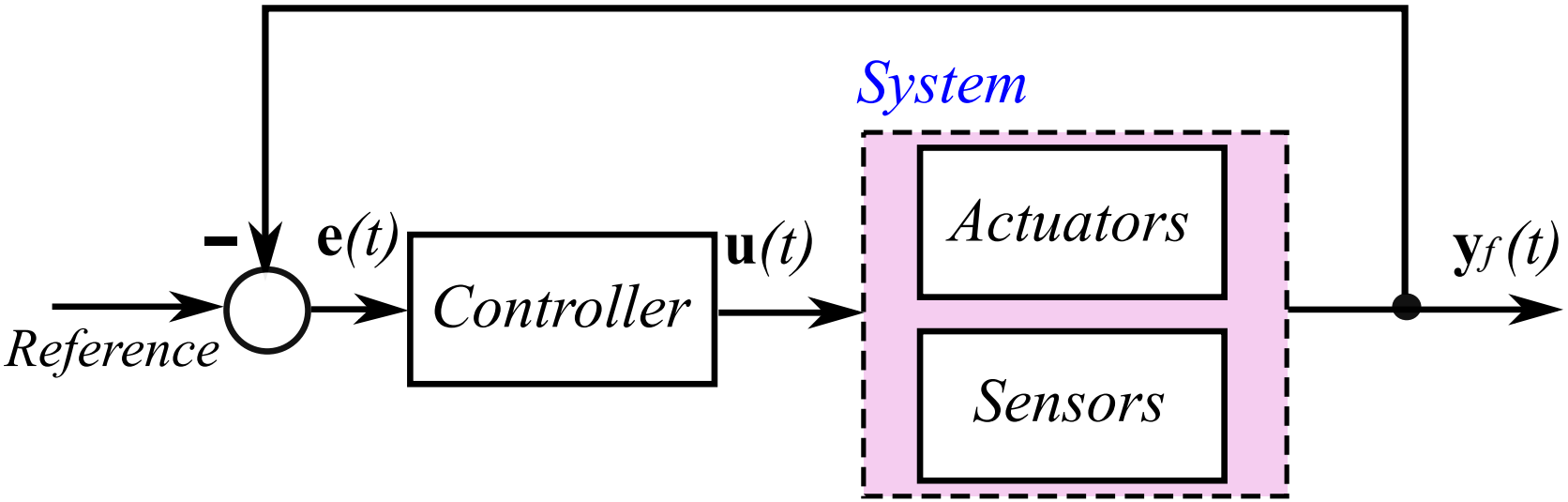

Figure: Nominal control system.

General FTC scheme

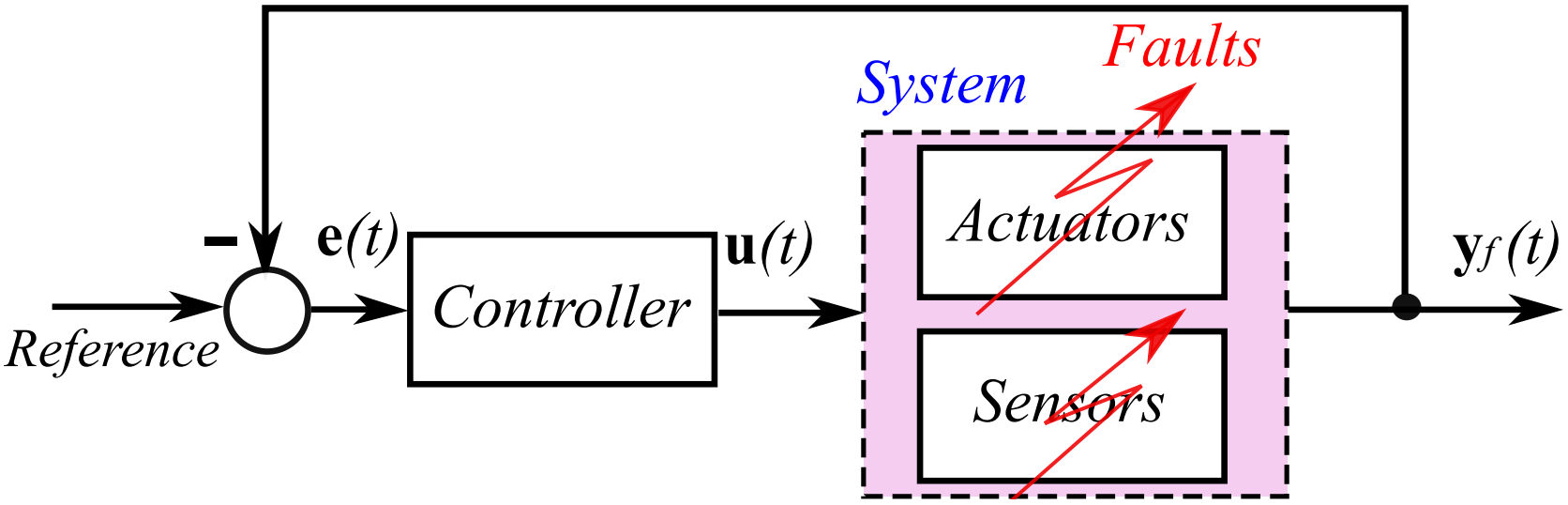

Figure: Control system with faults.

General FTC scheme

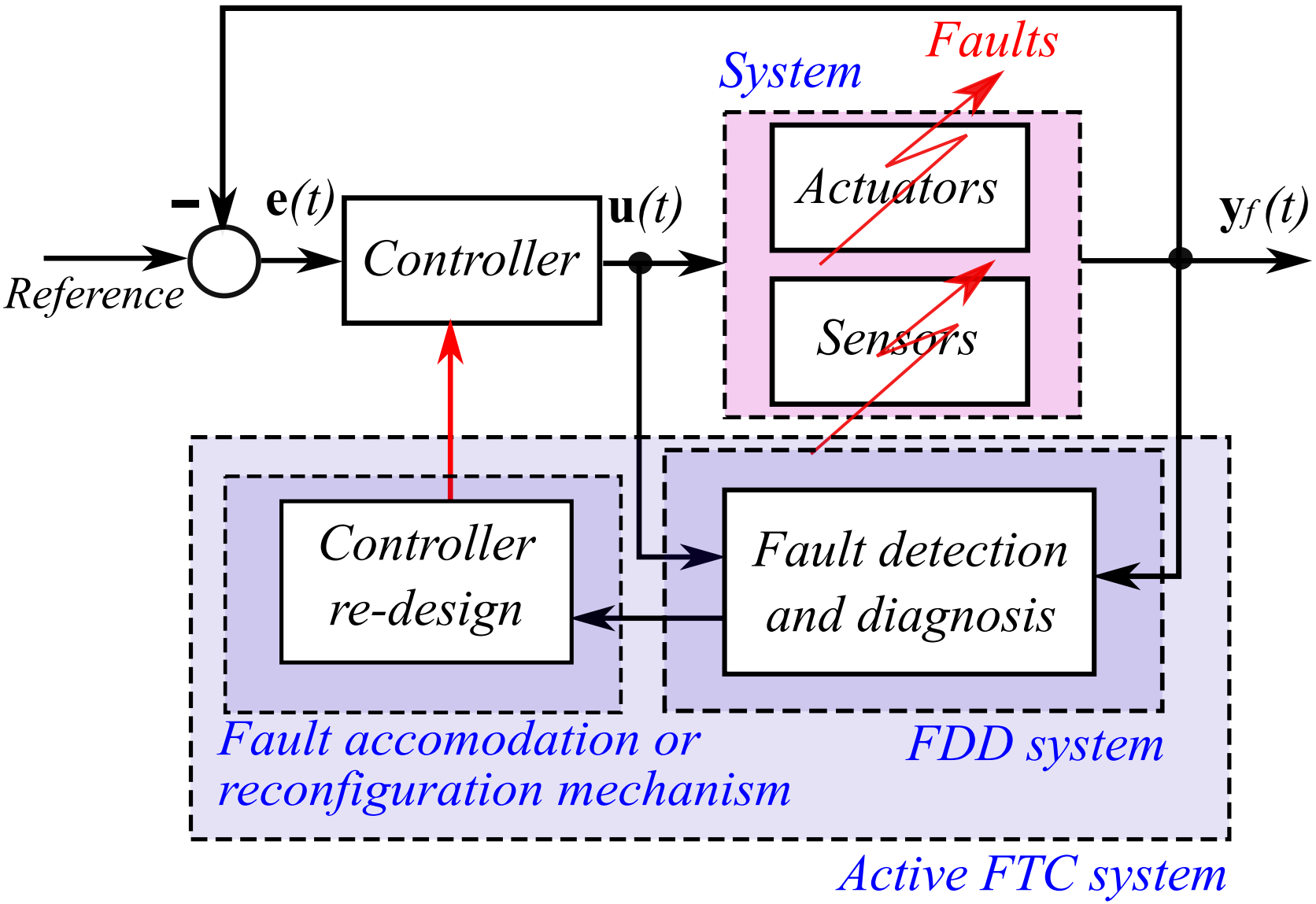

Figure: General FTC scheme.

Modeling of actuator faults

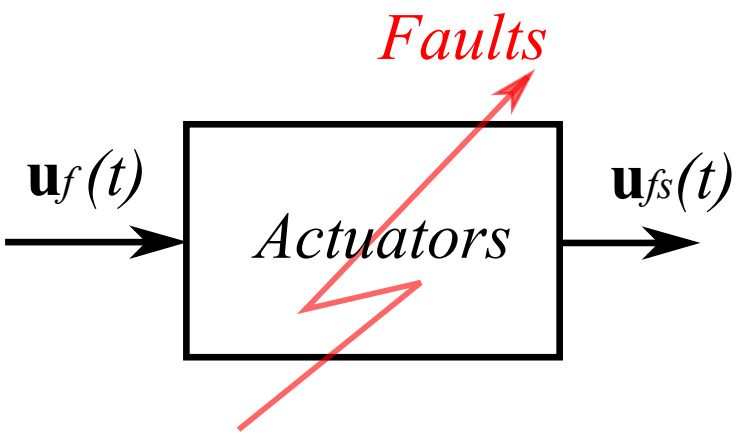

The actuator faults can be represented by an additive or a multiplicative signal. Consider the presence of a multiplicative fault:

$$\mathbf{u}_{f_s}(t) = (I_{n_u} - \mu(t))\mathbf{u}_f(t) \tag{1}$$

where the value of $\mu_i(t)$ indicates:

$$\begin{aligned}
\mu_i(t) &= 1 && \Rightarrow \text{a total fault of the } i\text{-th actuator,} \\
\mu_i(t) &= 0 && \Rightarrow \text{the } i\text{-th actuator is healthy,} \\
\mu_i(t) &=]0,1[&& \Rightarrow \text{a loss of effectiveness of } i\text{-th actuator.}
\end{aligned}$$

Modeling of actuator faults

Now, it is possible to rewrite (1) as an external additive fault signal

$$\mathbf{u}_{f_s}(t) = \mathbf{u}_f(t) + \eta(t), \tag{2}$$

where $\eta(t) = -\mu(t)\mathbf{u}_f(t)$.

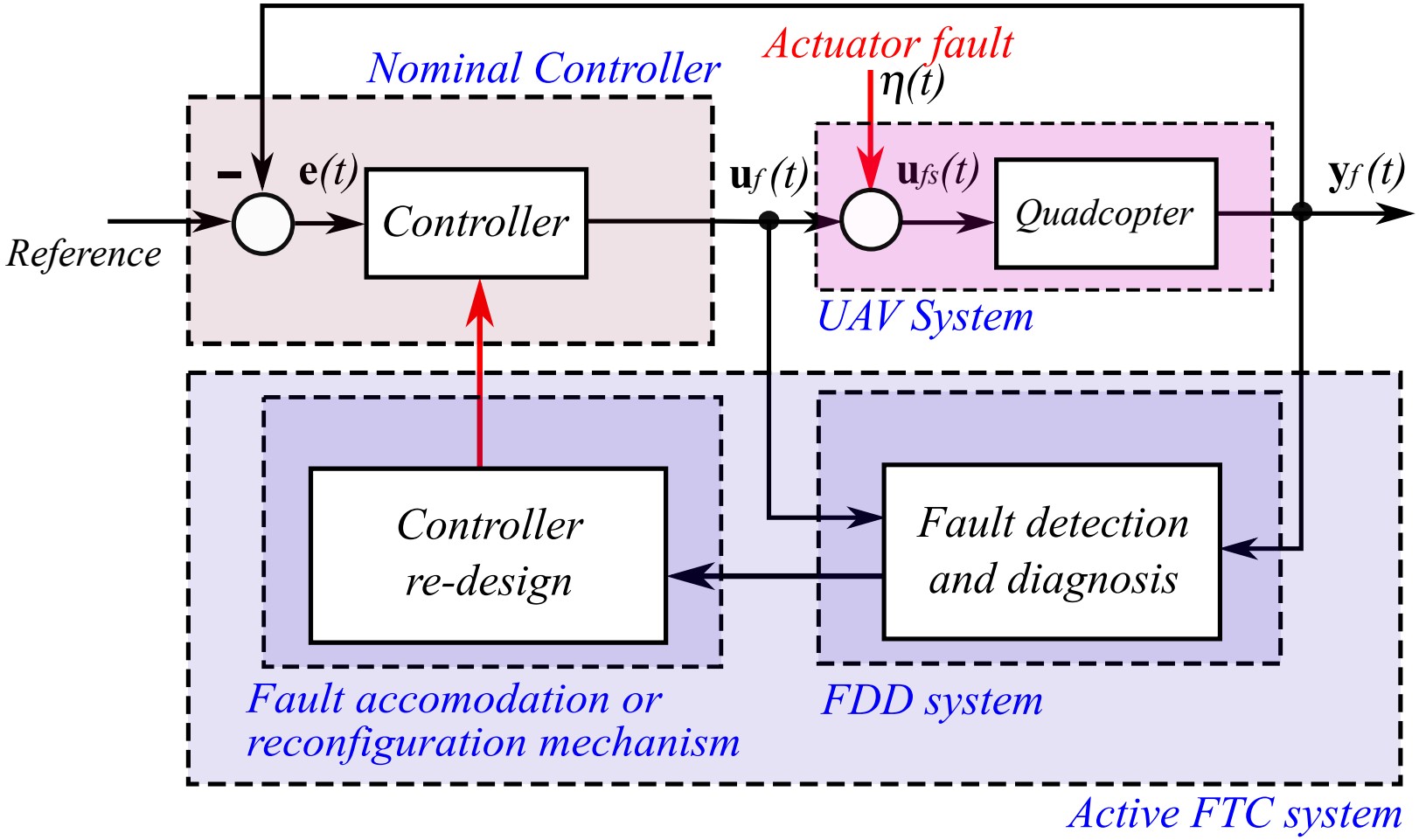

Contents

Mathematical model of a multirotor

Using the Newton-Euler formalism, the dynamics of a rigid body under external forces are defined by:

$$\ddot{x} = (c\psi s\theta c\phi + s\psi s\phi)\frac{1}{m}T$$

$$\ddot{y} = (s\psi s\theta c\phi - c\psi s\phi)\frac{1}{m}T$$

$$\ddot{z} = -g + (c\theta c\phi)\frac{1}{m}T$$

$$\ddot{\phi} = \dot{\theta}\dot{\psi}\left(\frac{I_y - I_z}{I_x}\right) - \frac{J_r}{I_x}\dot{\theta}\Omega_r + \frac{1}{I_x}R$$

$$\ddot{\theta} = \dot{\phi}\dot{\psi}\left(\frac{I_z - I_x}{I_y}\right) + \frac{J_r}{I_y}\dot{\phi}\Omega_r + \frac{1}{I_y}P$$

$$\ddot{\psi} = \dot{\phi}\dot{\theta}\left(\frac{I_x - I_y}{I_z}\right) + \frac{1}{I_z}Y$$

$$\underbrace{\begin{bmatrix} T \\ R \\ P \\ Y \end{bmatrix}}_{\vec{v}} = \Xi \underbrace{\begin{bmatrix} \Omega_1^2 \\ \cdots \\ \cdots \\ \Omega_N^2 \end{bmatrix}}_{\vec{\omega}^2 = \vec{W}}$$

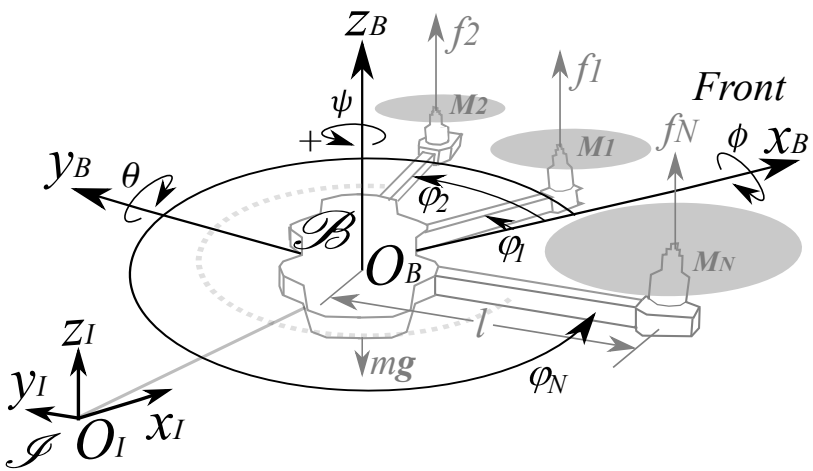

Control effectiveness matrix Ξ of a multirotor

$$\Xi(t) = \begin{bmatrix} \mathbf{t}_1(t) & \dots & \mathbf{t}_N(t) \\ \mathbf{r}_1(t) & \dots & \mathbf{r}_N(t) \\ \mathbf{p}_1(t) & \dots & \mathbf{p}_N(t) \\ \mathbf{y}_1(t) & \dots & \mathbf{y}_N(t) \end{bmatrix}$$

$$\begin{aligned} \mathbf{t}_i(t) &= \mu_i(t)\mathrm{b}, \\ \mathbf{r}_i(t) &= \mu_i(t)\mathrm{b}ls(\varphi_i), \\ \mathbf{p}_i(t) &= \mu_i(t)\mathrm{b}lc(\varphi_i), \\ \mathbf{y}_i(t) &= \mu_i(t)\mathrm{d}\Gamma_i, \end{aligned}$$

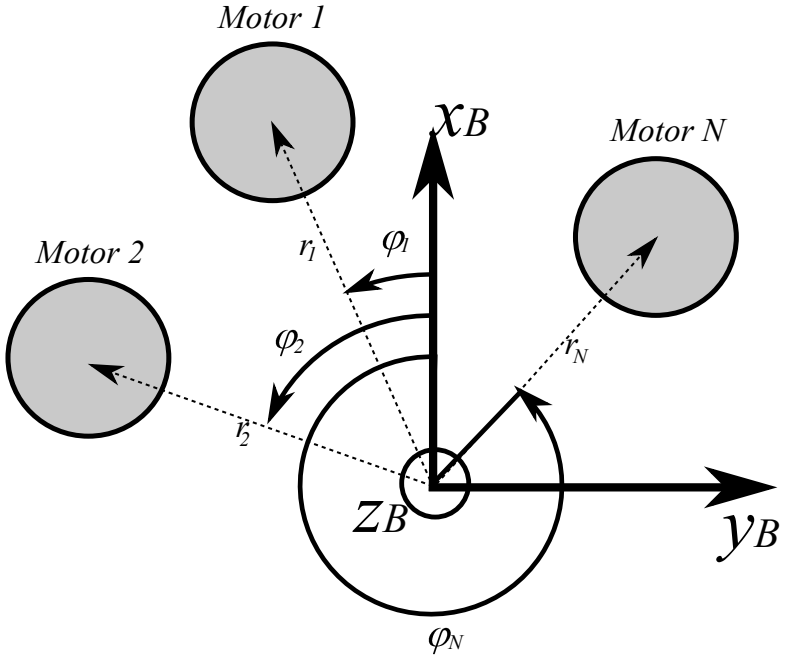

Control effectiveness matrix Ξ of a multirotor

$$\Xi(t) = \begin{bmatrix} \mathbf{t}_1(t) & \dots & \mathbf{t}_N(t) \\ \mathbf{r}_1(t) & \dots & \mathbf{r}_N(t) \\ \mathbf{p}_1(t) & \dots & \mathbf{p}_N(t) \\ \mathbf{y}_1(t) & \dots & \mathbf{y}_N(t) \end{bmatrix}$$

$$\begin{aligned} \mathbf{t}_i(t) &= \mu_i(t)\mathrm{b}, \\ \mathbf{r}_i(t) &= \mu_i(t)\mathrm{b}ls(\varphi_i), \\ \mathbf{p}_i(t) &= \mu_i(t)\mathrm{b}lc(\varphi_i), \\ \mathbf{y}_i(t) &= \mu_i(t)\mathrm{d}\Gamma_i, \end{aligned}$$

Contents

Analysis of static controllability

An important step in the design of fault tolerant systems is to know how faults affect the system:

Considering the physical limits of the actuators:

$$
\begin{aligned}
0 \leq T &\leq T_{max} \\
|R| &\leq R_{max} \\
|P| &\leq P_{max} \\
|Y| &\leq Y_{max},
\end{aligned}
$$

with $T = mg$, and the yaw torque $Y = 0$:

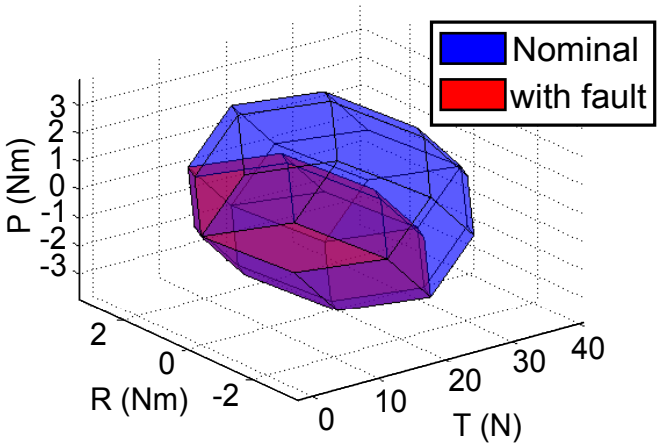

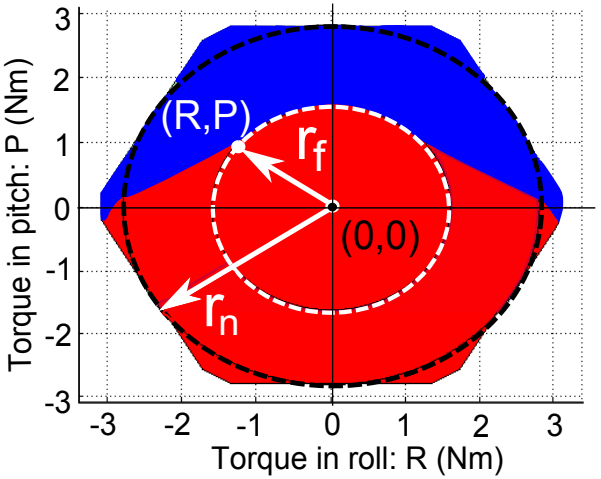

Contents

FDD system

The FDD system is performed using three model-based observers:

1. Linear Proportional Integral Observer (PIO),
2. Nonlinear Adaptive Observer (NAO).
3. quasi-Linear Parameter Varying PIO (qLPV-PIO),

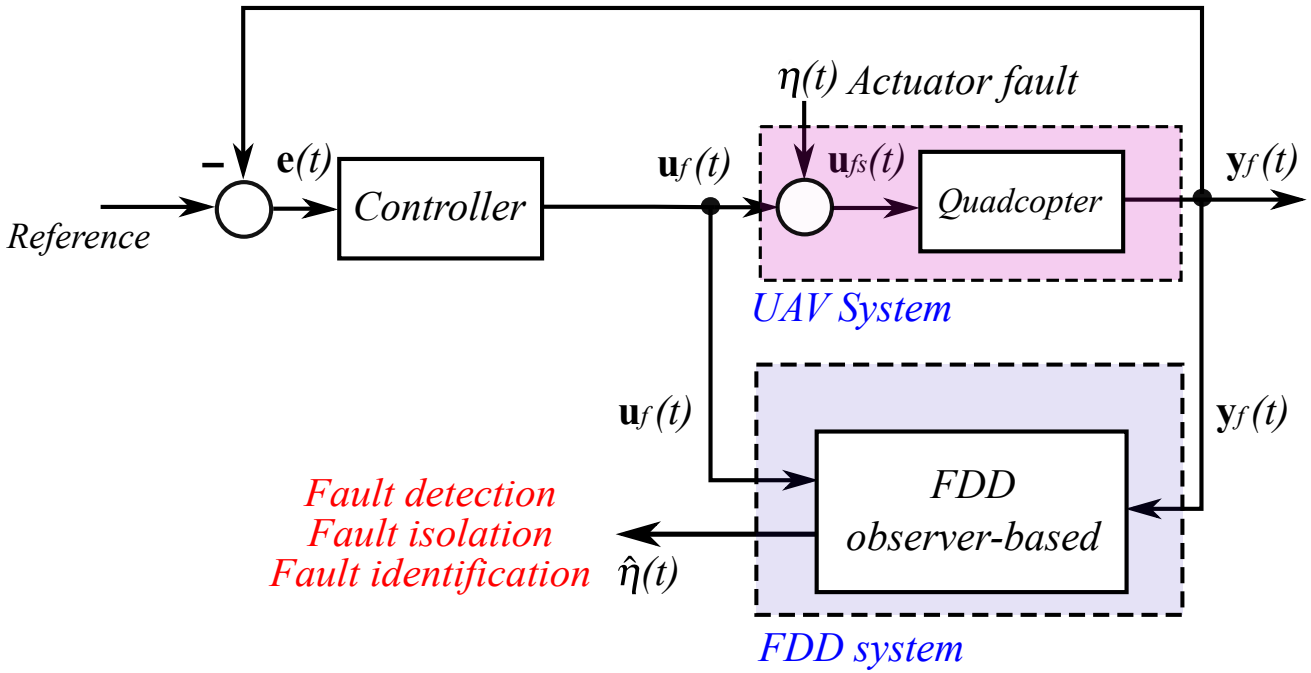

Figure: Fault detection and diagnosis system.

FDD system

The FDD system is performed using three model-based observers:

1. Linear Proportional Integral Observer (PIO),
2. Nonlinear Adaptive Observer (NAO).
3. quasi-Linear Parameter Varying PIO (qLPV-PIO),

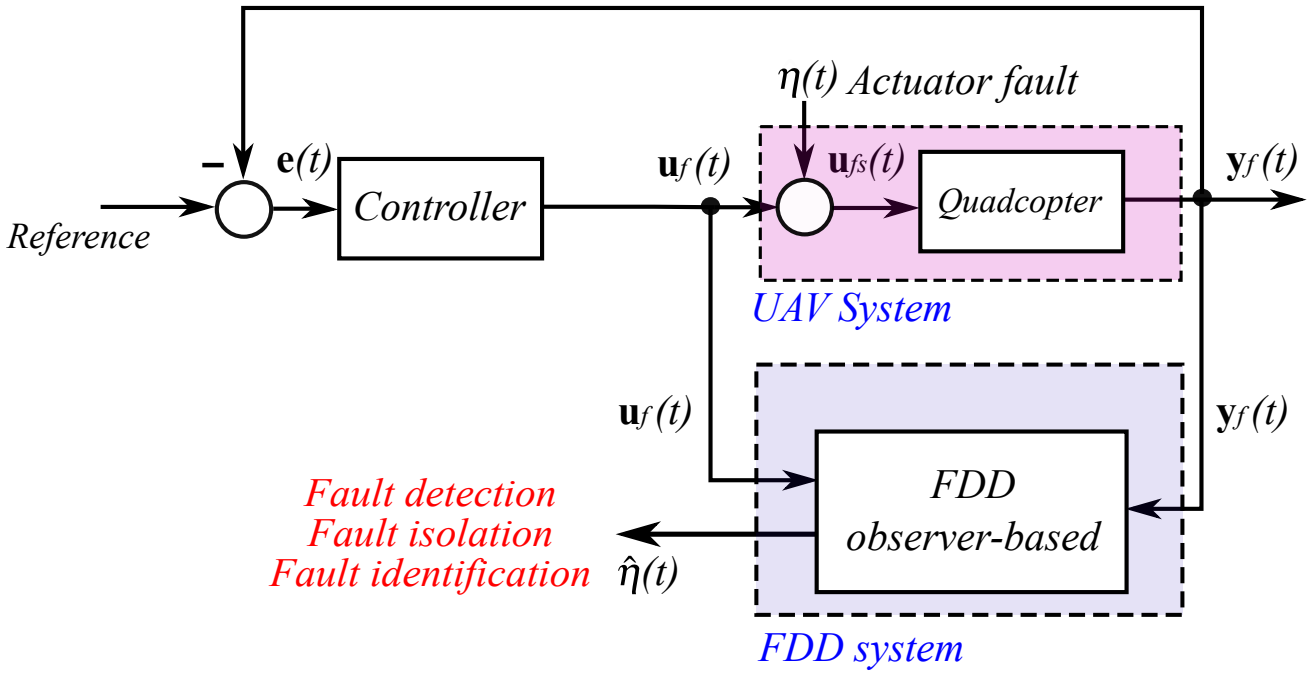

Figure: Fault detection and diagnosis system.

FDD system

The FDD system is performed using three model-based observers:

1. Linear Proportional Integral Observer (PIO),
2. Nonlinear Adaptive Observer (NAO).
3. quasi-Linear Parameter Varying PIO (qLPV-PIO),

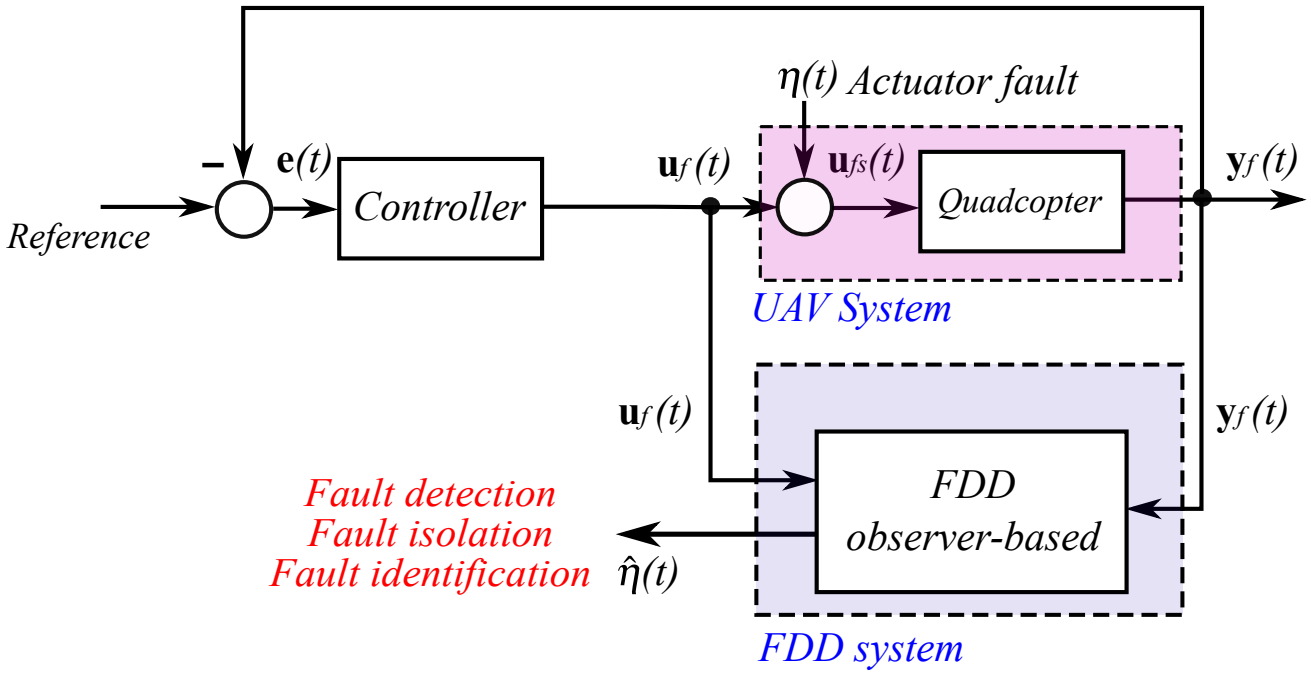

Figure: Fault detection and diagnosis system.

FDD system: linear PIO design

Consider the linear system described by

$$\begin{aligned} \dot{\mathbf{x}}(t) &= A\mathbf{x}(t) + B\mathbf{u}(t), \\ \mathbf{y}(t) &= C\mathbf{x}(t). \end{aligned} \tag{3}$$

The system (3) with faults $\eta(t)$ can be written as the following faulty system:

$$\begin{aligned} \dot{\mathbf{x}}_f(t) &= A\mathbf{x}_f(t) + B\mathbf{u}_f(t) + E\eta(t) + V\mathbf{w}(t), \\ \mathbf{y}_f(t) &= C\mathbf{x}_f(t) + W\mathbf{w}(t). \end{aligned} \tag{4}$$

Now, it is possible to apply a linear PIO in its usual form

$$\begin{aligned} \dot{\hat{\mathbf{x}}}_f(t) &= A\hat{\mathbf{x}}_f(t) + B\mathbf{u}_f(t) + E\hat{\eta}(t) + K_P\big(\mathbf{y}_f(t) - \hat{\mathbf{y}}_f(t)\big), \\ \hat{\mathbf{y}}_f(t) &= C\hat{\mathbf{x}}_f(t), \\ \dot{\hat{\eta}}(t) &= K_I\big(\mathbf{y}_f(t) - \hat{\mathbf{y}}_f(t)\big). \end{aligned} \tag{5}$$

FDD system: linear PIO design

Theorem 1. *The state and the fault estimation errors* $\mathbf{e}_a(t)$ *converge asymptotically to zero and the* $\mathcal{L}_2$*-gain of transfer from* $\mathbf{w}_a(t)$ *to* $\mathbf{e}_a(t)$ *is bounded by* $\gamma = \sqrt{\bar{\gamma}}$ *if* $\exists\ P,\ M$ *and* $\bar{\gamma}$.

P *defines a symmetric positive definite matrix,* M *represents a matrix, and* $\bar{\gamma}$ *a scalar solution to the following optimization problem*

$$\min_{P,\,M} \quad \gamma, \tag{6}$$

subject to

$$\begin{bmatrix} \mathsf{He}\{P\bar{A} - M\bar{C}\} + I & P\bar{\Gamma} - M\bar{W} \\ \bar{\Gamma}^\top P - \bar{W}^\top M^\top & -\bar{\gamma} I \end{bmatrix} < 0, \tag{7}$$

The gain of the observer is computed from $\bar{K}_{PI} = P^{-1}M$.

FDD system: NAO design

A nonlinear adaptive observer is given by

$$\begin{aligned}\dot{\hat{\mathbf{y}}}_f(t) =& \alpha\big(\mathbf{y}_f(t), \hat{\mathbf{z}}_f(t), \mathbf{u}_f(t)\big) + \beta\big(\mathbf{y}_f(t), \hat{\mathbf{z}}_f(t), \mathbf{u}_f(t)\big)\hat{\eta}(t) \\ &- K_y\big(\mathbf{y}_f(t) - \hat{\mathbf{y}}_f(t)\big), \\ \dot{\hat{\mathbf{z}}}_f(t) =& \Lambda\big(\mathbf{y}_f(t), \hat{\mathbf{z}}_f(t), \mathbf{u}_f(t)\big), \\ \dot{\hat{\eta}}(t) =& -K_f\beta^\top\big(\mathbf{y}_f(t), \hat{\mathbf{z}}_f(t), \mathbf{u}_f(t)\big)\big(\mathbf{y}_f(t) - \hat{\mathbf{y}}_f(t)\big),\end{aligned} \tag{8}$$

where $K_y > 0$ and $K_f > 0$ are the gains of the observer.

If there are no unmeasurable states, the observer given by (8) can be simplified as follows:

$$\begin{aligned}\dot{\hat{\mathbf{y}}}_f(t) =& \alpha\big(\mathbf{y}_f(t), \mathbf{u}_f(t)\big) + \beta\big(\mathbf{y}_f(t), \mathbf{u}_f(t)\big)\hat{\eta}(t) \\ &- K_y\big(\mathbf{y}_f(t) - \hat{\mathbf{y}}_f(t)\big), \\ \dot{\hat{\eta}}(t) =& -K_f\beta^\top\big(\mathbf{y}_f(t), \mathbf{u}_f(t)\big)\big(\mathbf{y}_f(t) - \hat{\mathbf{y}}_f(t)\big).\end{aligned} \tag{9}$$

FDD system: qLPV-PIO design

In order to reduce the complexity of nonlinear equations without loss compromise between representation and controllability, and to use the Linear Time Invariant (LTI) control theory, a quasi-Linear Parameter Varying (qLPV) representation is considered.

$$\dot{\mathbf{x}}(t) = \sum_{i=1}^{k} \rho_i\big(\zeta(t)\big)\big(A_i\mathbf{x}(t) + B_i\mathbf{u}(t)\big),$$

$$\mathbf{y}(t) = C\mathbf{x}(t),$$

$$\rho_i\big(\zeta(t)\big) \geq 0, \quad \forall t, \forall i = 1, \ldots, k,$$

$$\sum_{i=1}^{k} \rho_i\big(\zeta(t)\big) = 1, \quad \forall t.$$

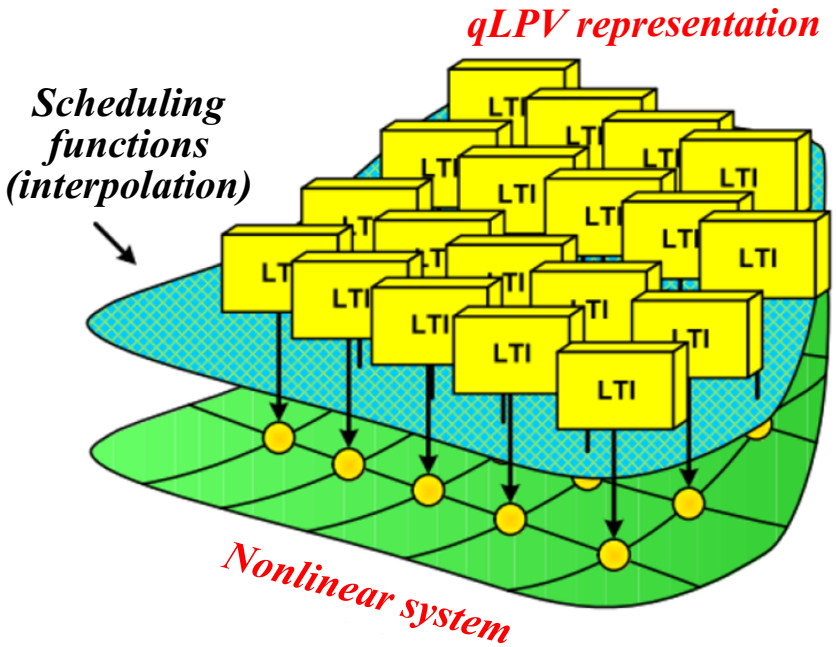

FDD system: qLPV-PIO design

Nonlinear system with faults $\eta(t)$ modeled as unknown inputs and disturbances $\mathbf{w}(t)$ is described by the following qLPV model

$$\begin{aligned}\dot{\mathbf{x}}_f(t) =& \sum_{i=1}^{k} \rho_i(\zeta(t))\big(A_i\mathbf{x}_f(t) + B_i\mathbf{u}_f(t) + E_i\eta(t) + W_i\mathbf{w}(t)\big),\\ \mathbf{y}_f(t) =& C\mathbf{x}_f(t),\end{aligned} \tag{10}$$

An extension of classical PI observer for the system (10) is considered by the following equations:

$$\begin{aligned}\dot{\hat{\mathbf{x}}}_f(t) =& \sum_{i=1}^{k} \rho_i(\zeta(t))\big(A_i\hat{\mathbf{x}}_f(t) + B_i\mathbf{u}_f(t) + E_i\hat{\eta}(t)\\ &+ K_{Pi}(\mathbf{y}_f(t) - \hat{\mathbf{y}}_f(t))\big),\\ \hat{\mathbf{y}}_f(t) =& C\hat{\mathbf{x}}_f(t),\\ \dot{\hat{\eta}}(t) =& \sum_{i=1}^{k} \rho_i(\zeta(t))K_{Ii}(\mathbf{y}_f(t) - \hat{\mathbf{y}}_f(t)),\end{aligned} \tag{11}$$

FDD system: qLPV-PIO design

Theorem 2. *The state and the fault estimation errors* $\mathbf{e}_a(t)$ *converge asymptotically to zero and the* $\mathcal{L}_2$*-gain of transfer from* $\mathbf{w}_a(t)$ *to* $\mathbf{e}_a(t)$ *is bounded by* $\gamma = \sqrt{\bar{\gamma}}$ *if* $\exists\ P,\ M_i$ *and* $\bar{\gamma}$*.* P *defines a symmetric positive definite matrix,* M_i *represents matrices with* $i = 1, 2 \ldots, k$*, and* $\bar{\gamma}$ *a scalar solution to the following optimization problem*

$$\min_{P,\ M_i} \quad \gamma, \tag{12}$$

subject to

$$\begin{bmatrix} \mathsf{He}\{P\bar{A}_i - M_i\bar{C}\} + I & P\bar{\Gamma}_i \\ \bar{\Gamma}_i^{\top} P & -\bar{\gamma} I \end{bmatrix} < 0, \tag{13}$$

The gains of the observer are computed from $\bar{K}_{PIi} = P^{-1} M_i$*.*

FDD system

Fault detection

The additive fault estimation vector $\hat{\eta}(t)$ are used to detect any actuator faults:

$$\begin{aligned} \hat{\eta}_s(t) \geq H_s \quad &\text{or} \quad \hat{\eta}_s(t) \leq h_s \Rightarrow \text{in faulty case} \\ \hat{\eta}_s(t) < H_s \quad &\text{or} \quad \hat{\eta}_s(t) > h_s \Rightarrow \text{in fault-free case} \end{aligned} \tag{14}$$

where H_s and h_s are the upper and lower thresholds.

Fault isolation

Table: Fault isolation logic.

Faults	$\hat{\eta}_2(t)$	$\hat{\eta}_3(t)$
M_1	-	-
M_2	+	-
M_3	+	+
M_4	-	+

Contents

FTC system: partial fault

The goal is to estimate the magnitude of the actuator faults $\hat{\eta}(t)$, for provide a control law $\mathbf{u}_f(t)$ and ensure the tracking trajectory performance of the faulty system to the reference one.

$$\mathbf{u}_f(t) = \mathbf{u}(t) - \hat{\eta}(t). \tag{15}$$

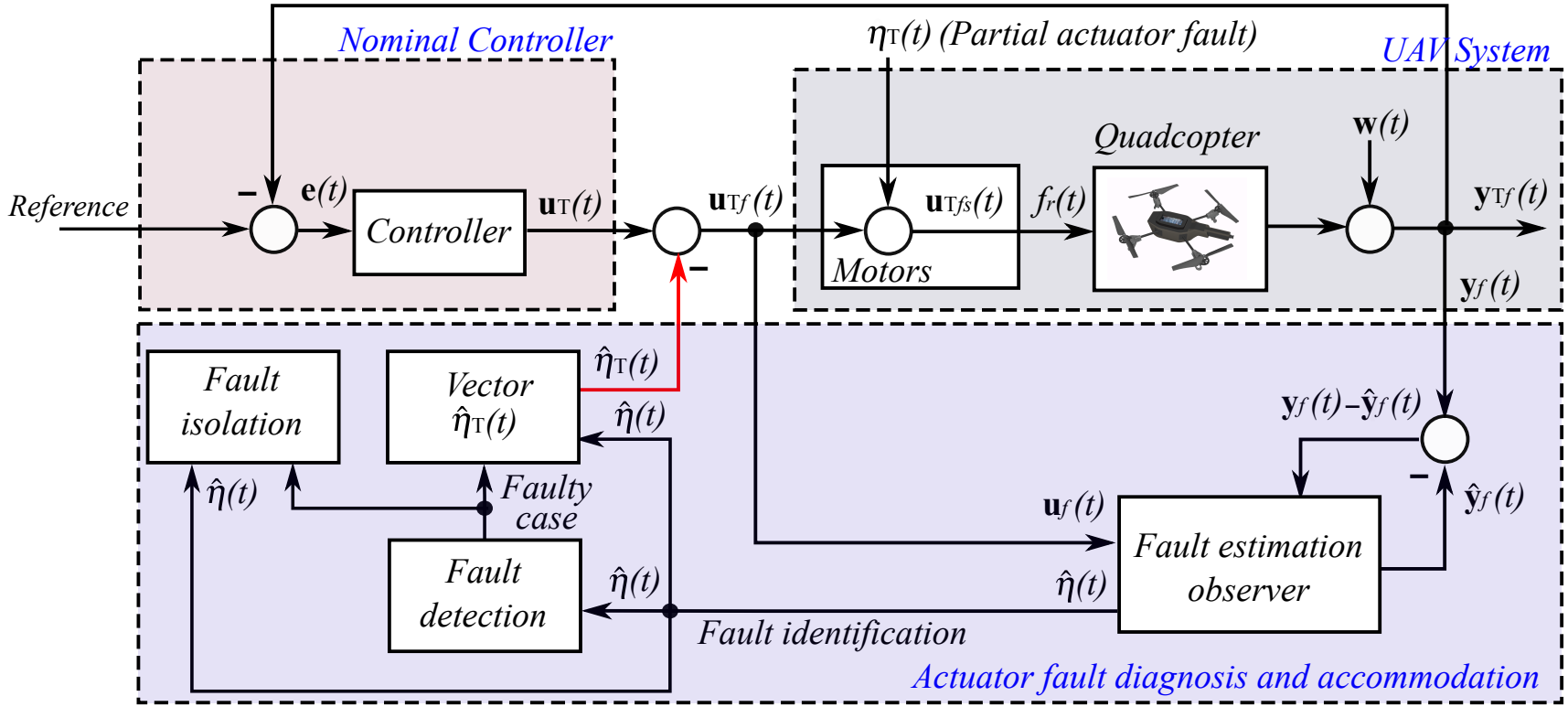

Figure: FTC scheme: partial fault.

FTC system: total fault

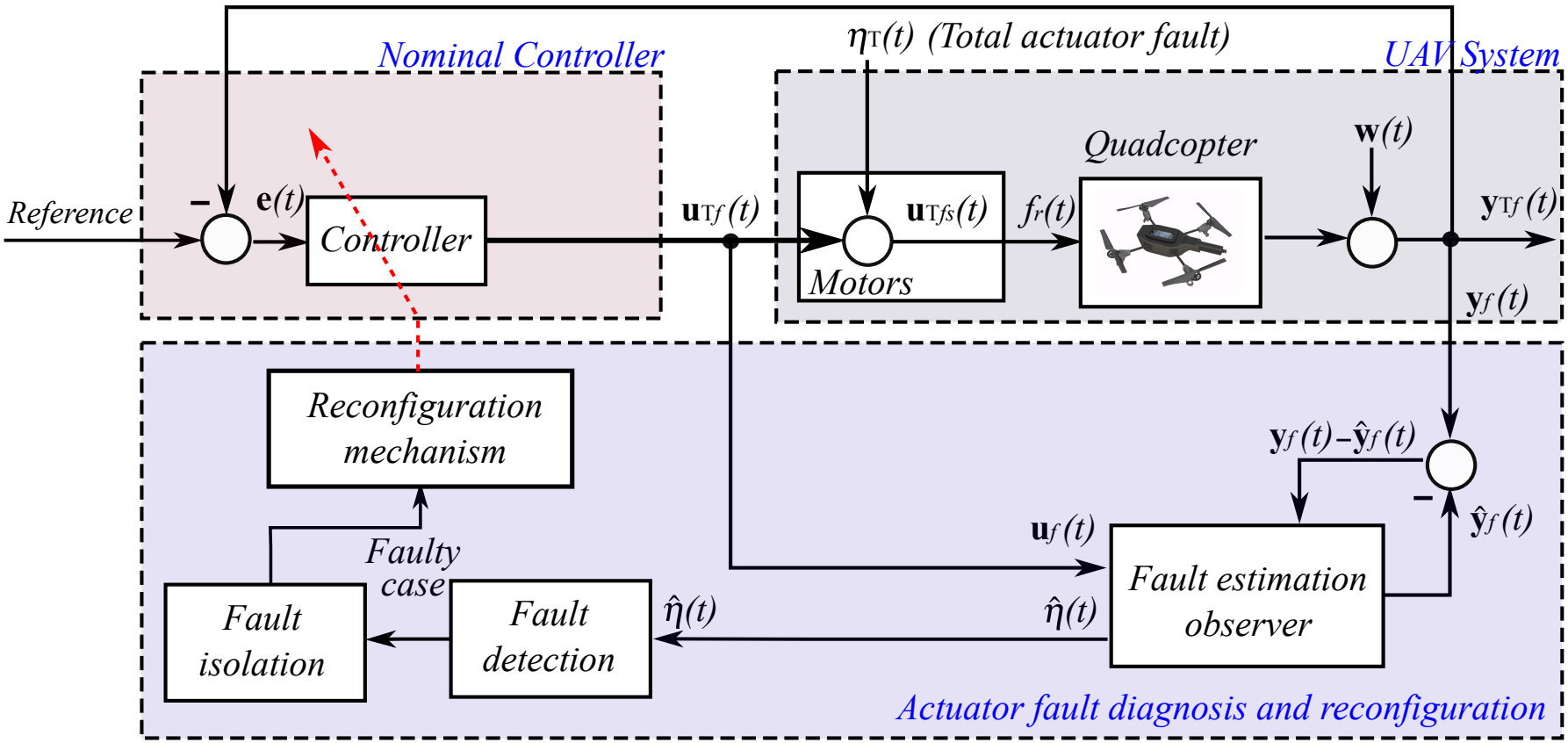

Figure: FTC scheme: total fault.

Contents

FTC system: partial fault

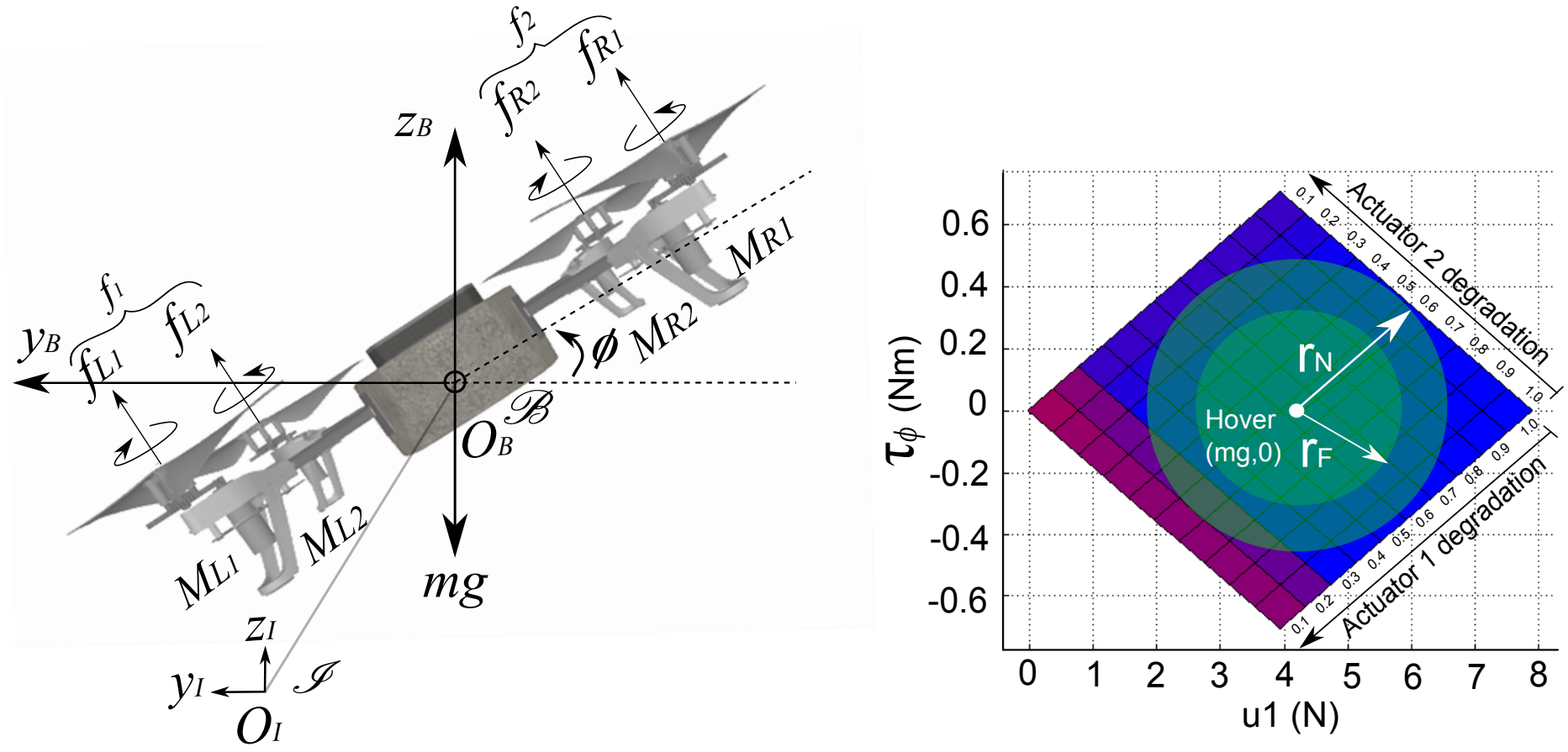

(a) (b)

Figure: (a) Quadcopter configuration evolving in its longitudinal plane with the main forces acting in the vehicle, (b) Analysis of static controllability.

FTC system: partial fault

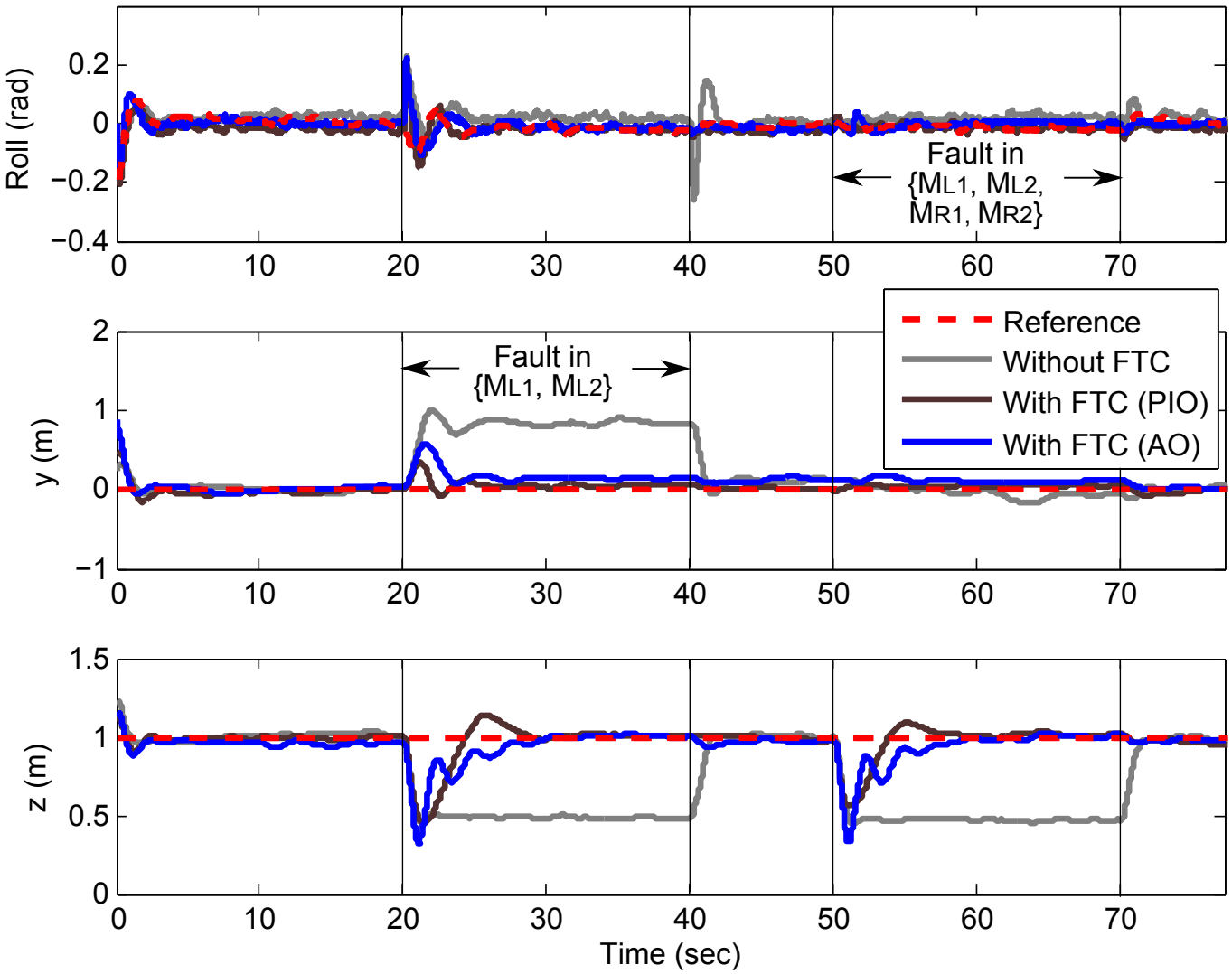

Figure: Experimental tests: comparison between the faulty quadcopter without and with FTC, 30 % fault $M_{L_{1,2}}$, then M_{L_i} and M_{R_i}.

FTC system: partial fault

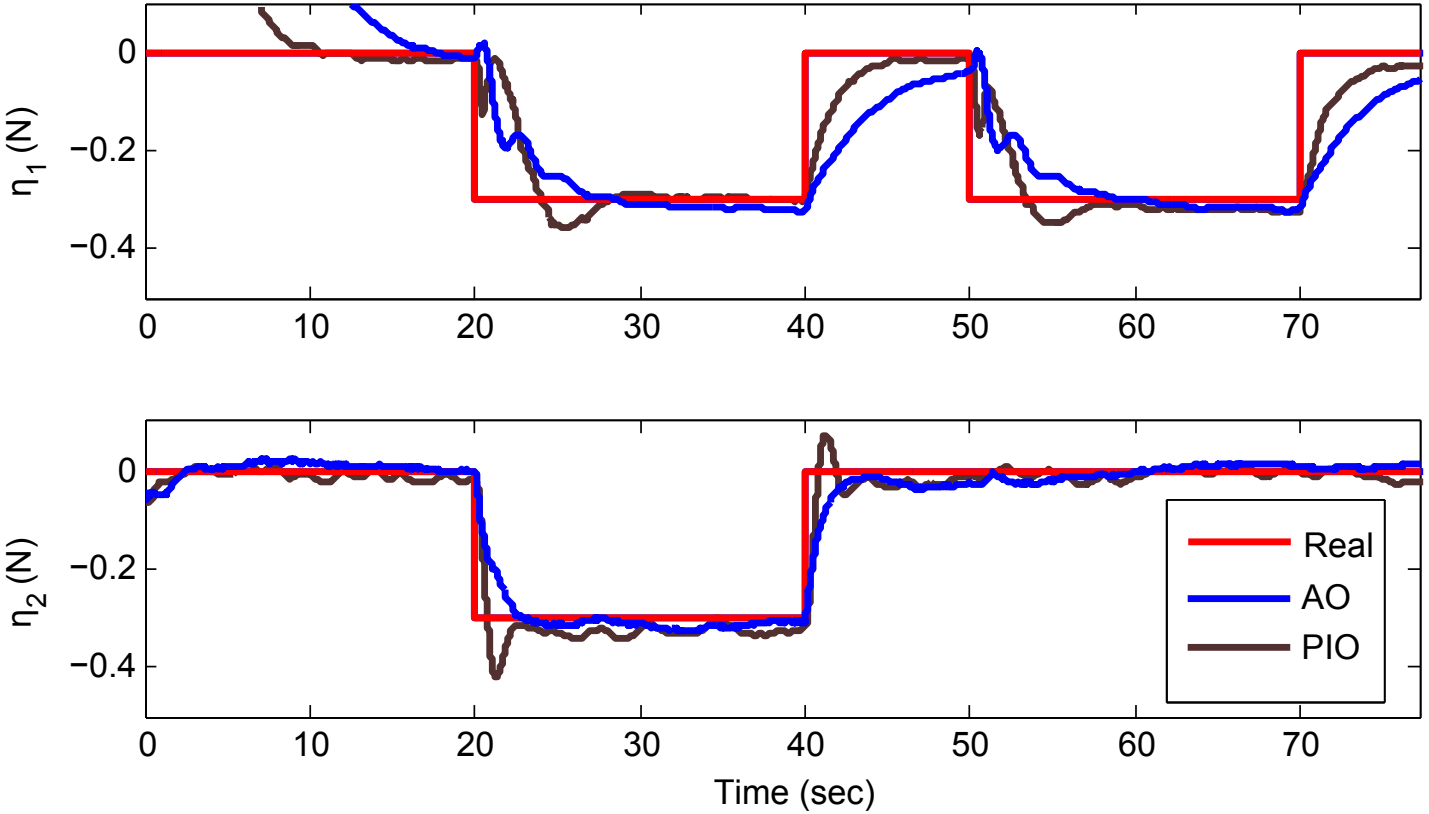

Figure: Experimental tests: additive fault estimation 30 % fault $M_{L_{1,2}}$, then M_{L_i} and M_{R_i}.

Contents

FTC system: partial fault

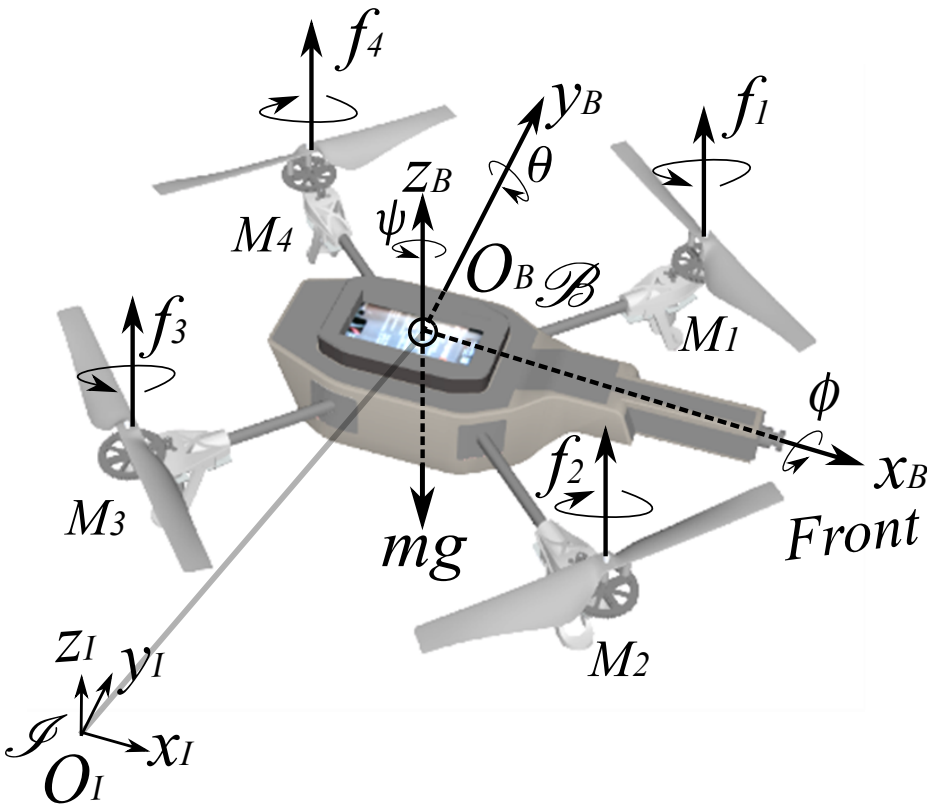

(a)

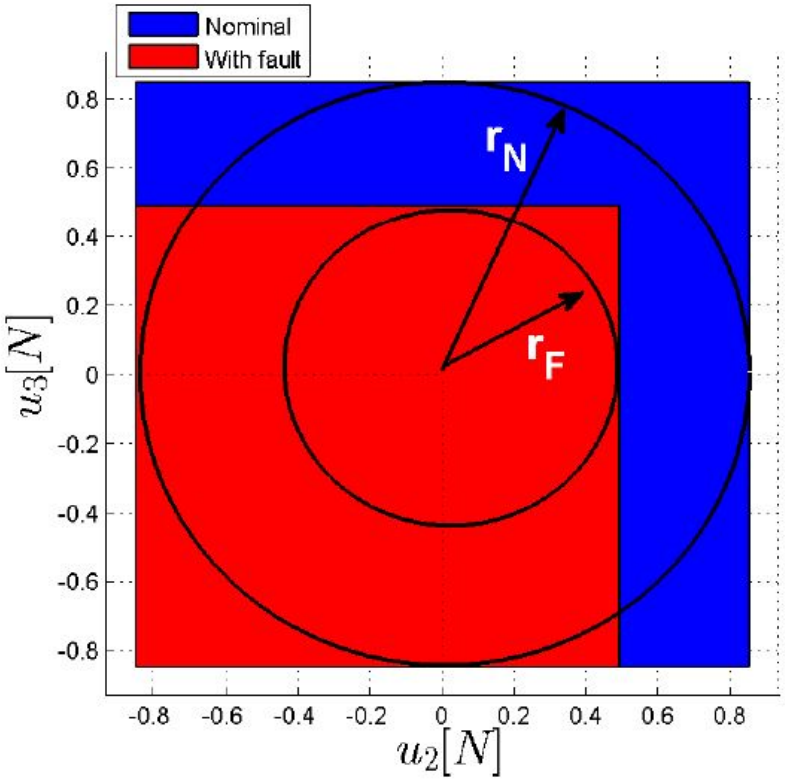

(b)

Figure: (a) Quadcopter configuration, (b) Analysis of static controllability with partial fault of 12 % in M_2.

FTC system: partial fault

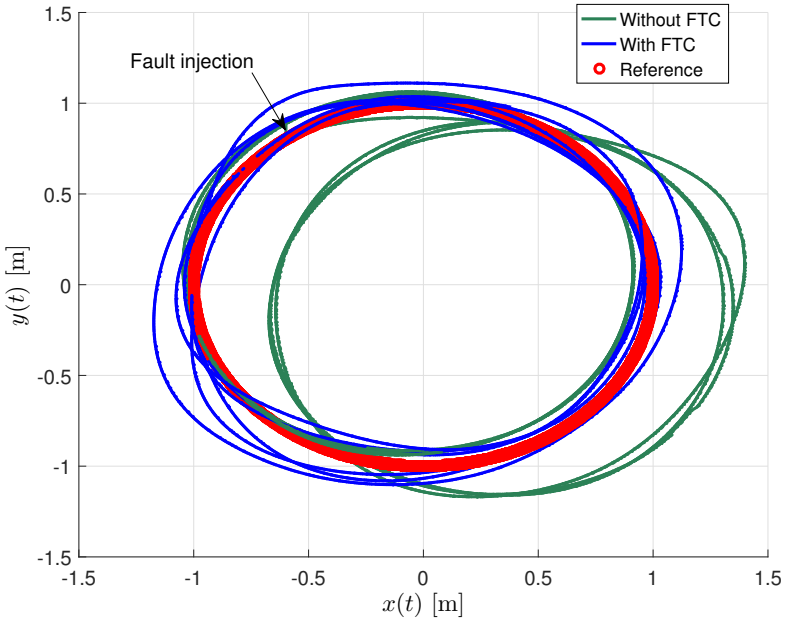

(a)

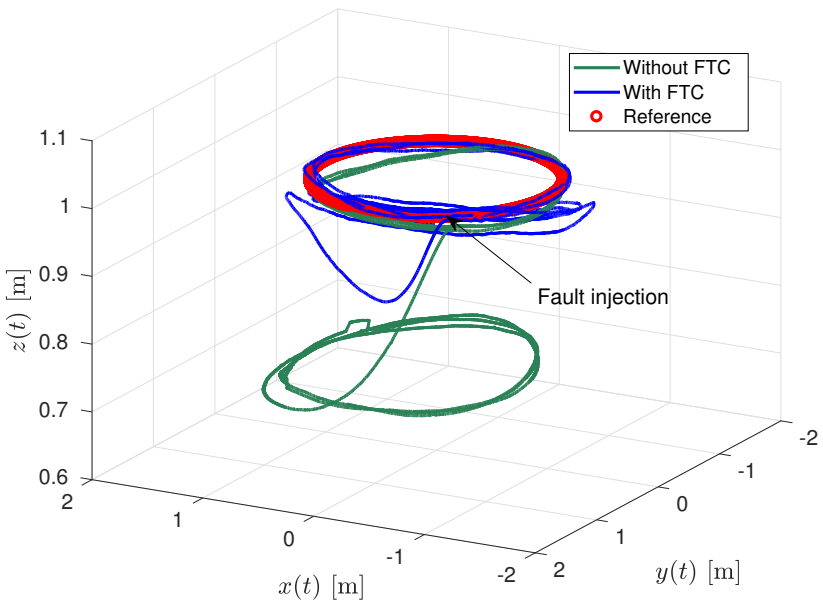

(b)

Figure: Experimental tests: comparison between the faulty quadcopter without and with FTC, with partial fault of 12 % in M_2.

FTC system: partial fault

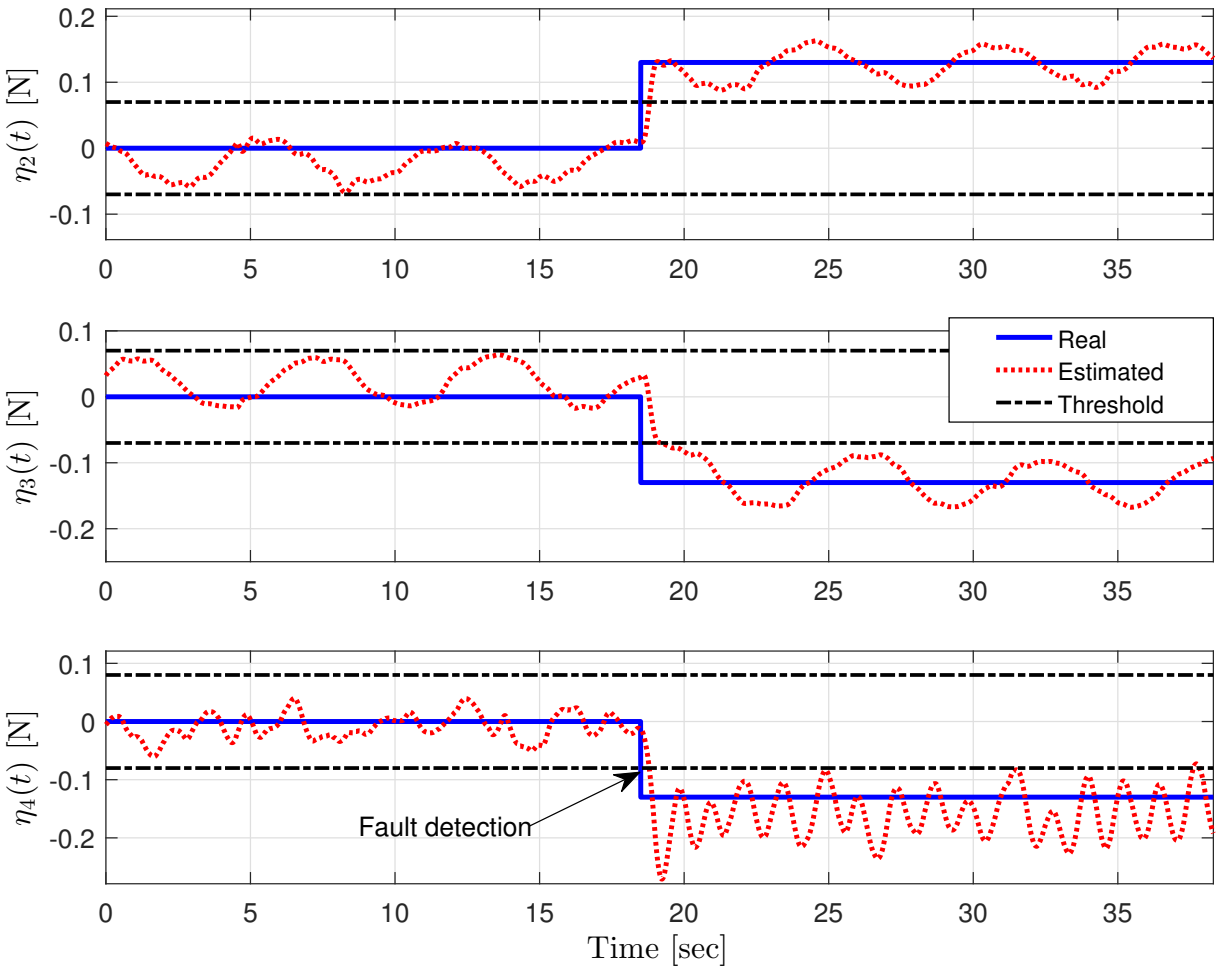

Figure: Experimental tests: additive fault estimation with partial fault of 12 % in M_2.

FTC system: partial fault (VIDEO)

Contents

FTC system: total fault

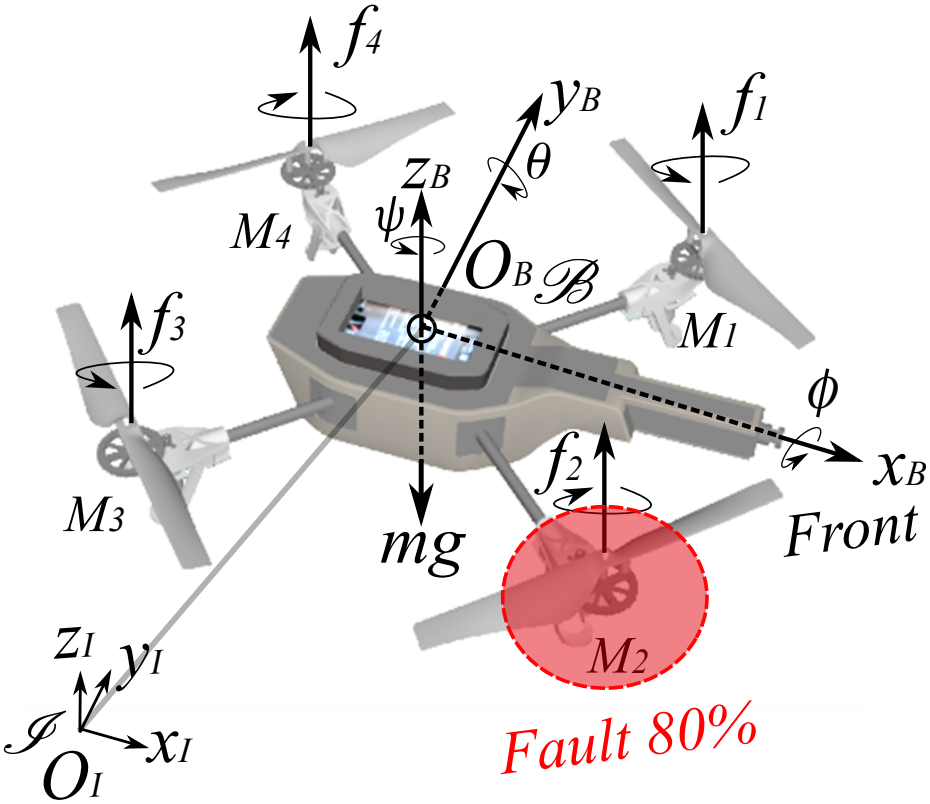

(a)

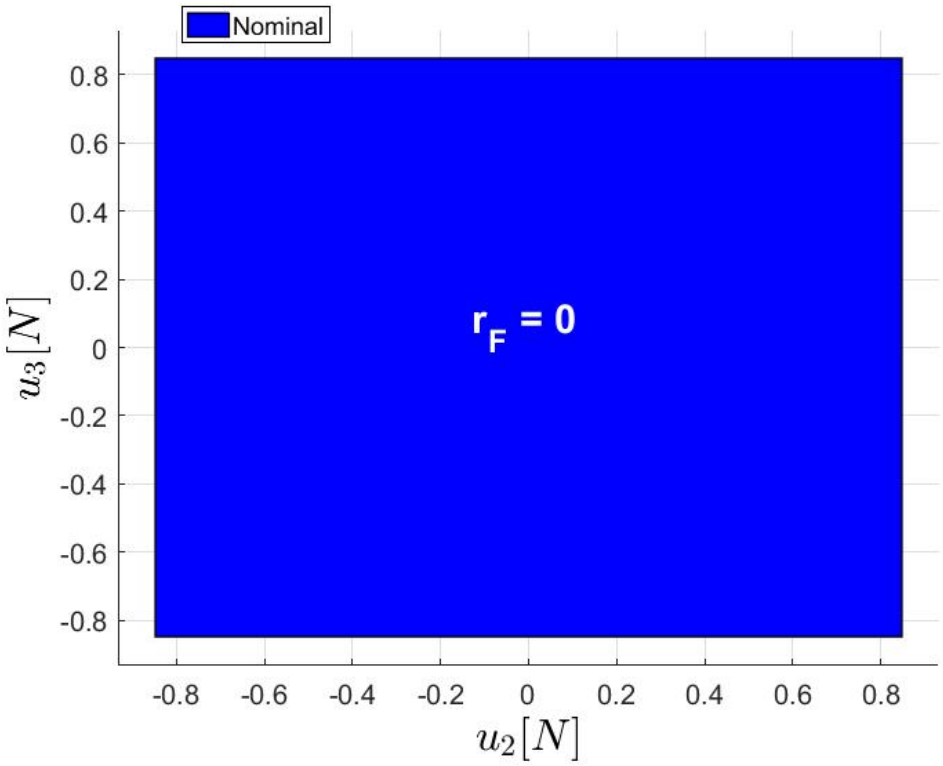

(b)

Figure: (a) Quadcopter configuration, (b) Analysis of static controllability with fault of 80 % in M_2.

FTC system: total fault

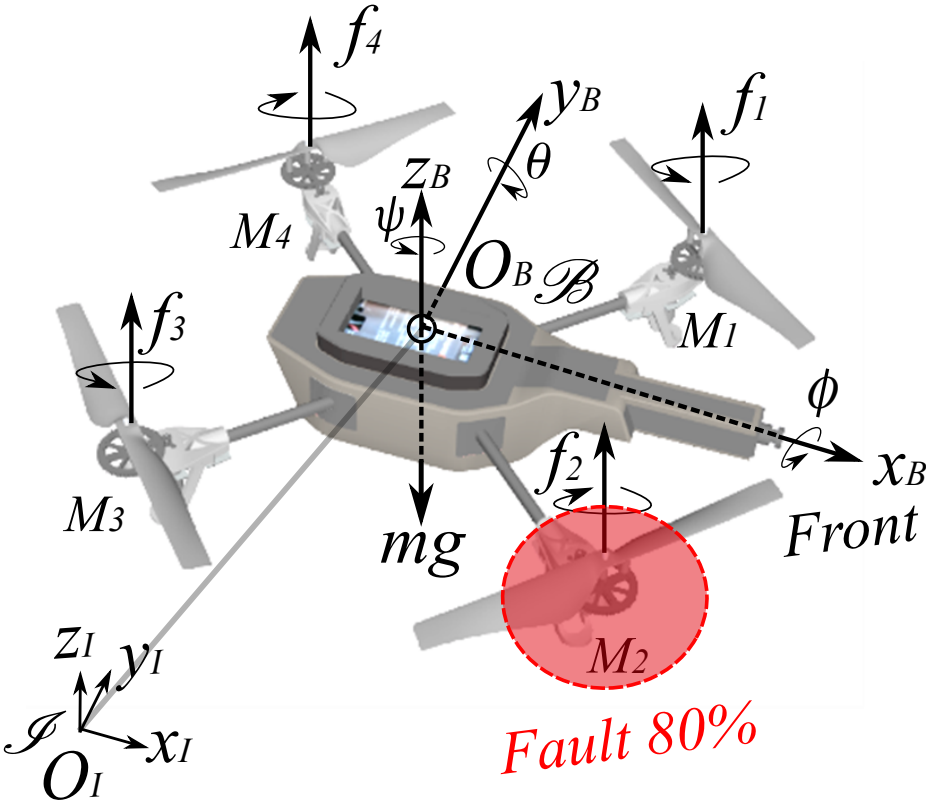

(a)

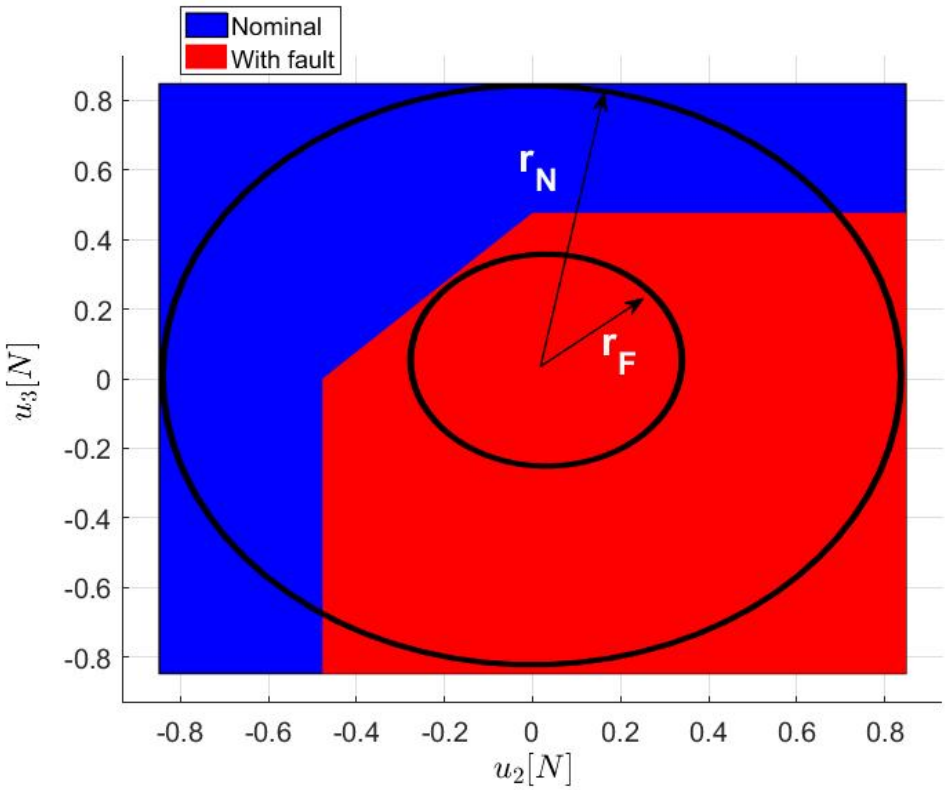

(b)

Figure: (a) Quadcopter configuration, (b) Analysis of static controllability with fault of 80 % in M_2.

FTC system: total fault

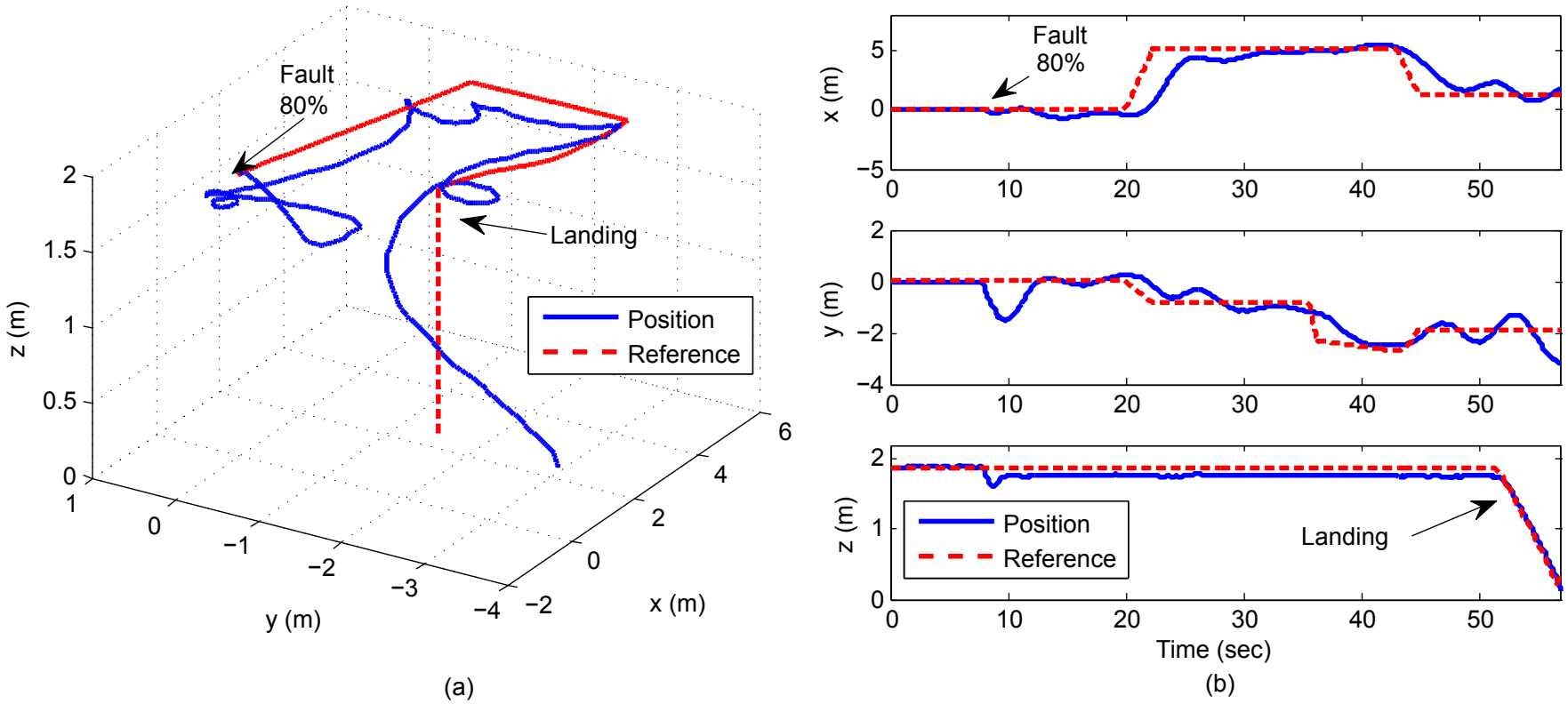

Figure: Experimental tests: Position of the quadcopter with fault of 80 % in M_2.

FTC system: total fault

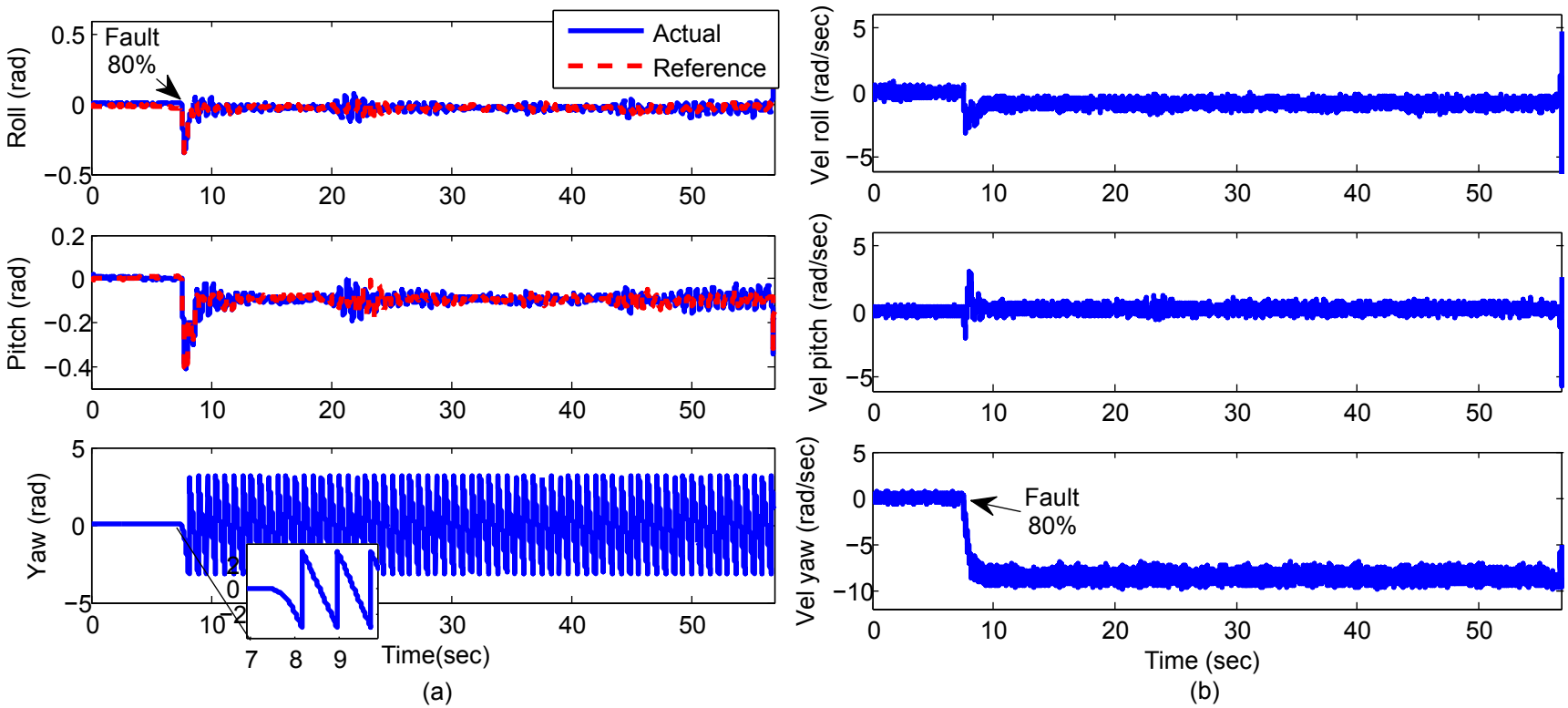

Figure: Experimental tests: Attitude dynamics of the quadcopter with fault of 80 % in M_2.

FTC system: total fault

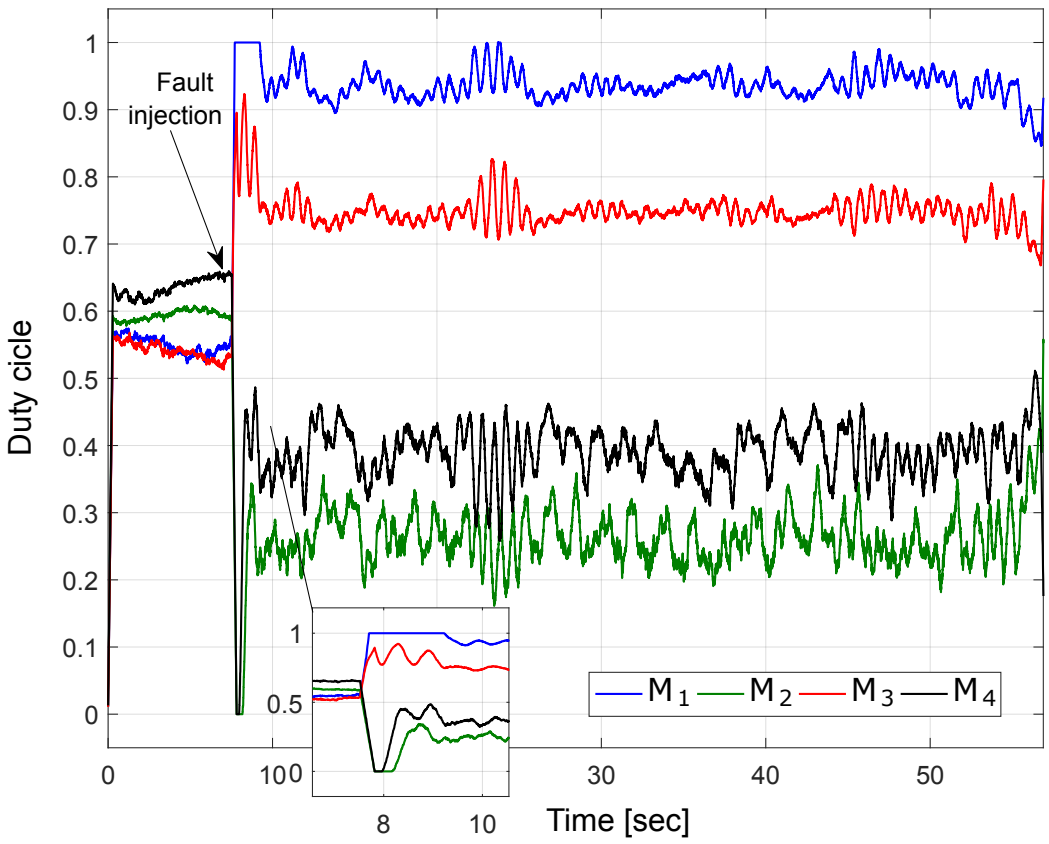

Figure: Experimental tests: motors' duty cycles (percentage).

FTC system: total fault (VIDEO)

Conclusions

- In order to detect, isolate and estimate the actuator partial or total faults, a model-based observer was applied to the rotational dynamics of the quadcopter.
- The partial fault was accommodated by using the fault estimation to reduce the effect of the fault.
- In order to reconfigurate a total fault in an actuator of the quadcopter, the FTC system stabilizes the vehicle around the desired position with a constant yaw velocity.

Conclusions

- In order to detect, isolate and estimate the actuator partial or total faults, a model-based observer was applied to the rotational dynamics of the quadcopter.
- The partial fault was accommodated by using the fault estimation to reduce the effect of the fault.
- In order to reconfigurate a total fault in an actuator of the quadcopter, the FTC system stabilizes the vehicle around the desired position with a constant yaw velocity.

Conclusions

- In order to detect, isolate and estimate the actuator partial or total faults, a model-based observer was applied to the rotational dynamics of the quadcopter.
- The partial fault was accommodated by using the fault estimation to reduce the effect of the fault.
- In order to reconfigurate a total fault in an actuator of the quadcopter, the FTC system stabilizes the vehicle around the desired position with a constant yaw velocity.

Merci!–Gracias!–Thanks!